www.bescatray.com

BT Series

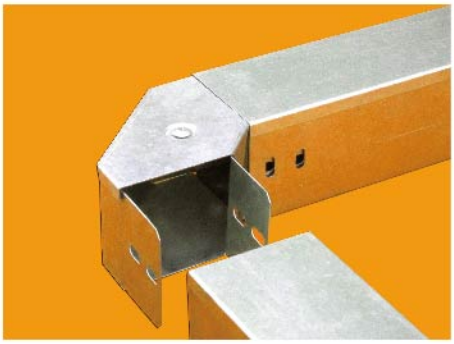
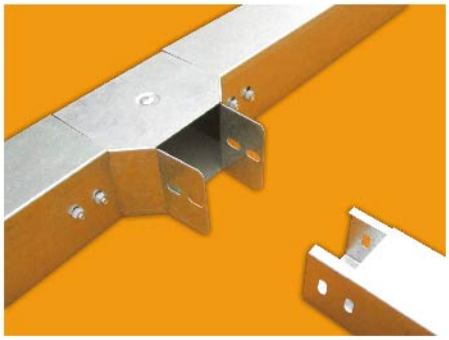

BESCA Cable Trunking

Cable Trunking of BESCA is an economical wire management system designed to support and protect electrical wires and cables.
Cable Trunking is permitted in a variety of indoor and outdoor applications.

Standard finish of BESCA Cable Trunking as below, customize available:
- **G ----- Pre-galvanized steel**
- **H ----- Hot Dip Galvanized**
- **S4 --- Stainless Steel SS304**
- **S6 --- Stainless Steel SS316**
- **A ----- Aluminium**
- **FRP -- Fiberglass Reinforced Plastics / GRP**

BESCA Cable Trunking Advantages:
1. **Cheap and easy installation method.**
2. **The cables are enclosed in trunking, there is no risk of cable insulation to be damaged.**
3. **Cables are safe against dust and humidity.**
4. **Alternations are possible.**
5. **Trunking systems has a long life.**

Disadvantages:
1. **Expensive compare to other wiring systems.**
2. **Care and good workmanship are needed to ensure a successful installation.**

Suffix	Finish
G	Pre-Galvanized / PG / GI
H	Hot Dip Galvanized / HDG
S4	Stainless Steel SS304
S6	Stainless Steel SS316
P	Powder Coated
A	Aluminum

Suffix	Finish
FRP	Fiberglass Reinforced Plastics / GRP
F	Fire Rated
Z	Zinc Plated
E	Electrolytic Polishing
M	Mill / Plain Steel

G Pre-Galvanized / PG / GI H Hot Dip Galvanized / HDG S4 Stainless Steel SS304 S6 Stainless Steel SS316 P Powder Coated A Aluminum

BT1/2/3/4/5/6 Cable Trunking P/05

BT1/2/3/4/5/6 -E3 Elbow 90° P/06

BT1/2/3/4/5/6 -T Tee P/06

BT1/2/3/4/5/6 -C Cross P/06

BT1/2/3/4/5/6 -IR Inside Riser P/06

BT1/2/3/4/5/6 -OR Outside Riser P/07

BT*-MR Middle Reducer P/07

BT*-RR Right Hand Reducer P/07

BT*-LR Left Hand Reducer P/07

BT*-D Divider P/08

BT*-BE Blind End P/08

BW*-SC Straight Coupler P/08

BT7 Cable Trunking P/09

BT7 Elbow 90° P/10

BT7 -T Tee P/10

BT7 -C Cross P/10

BT7 -IR Inside Riser P/11

BT7 -OR Outside Riser P/11

BT7-MR Middle Reducer P/11

BT7-RR Right Hand Reducer P/12

BT7-LR Left Hand Reducer P/12

BW7-SC Straight Coupler P/12

BT8 Cable Trunking P/13

BT8 Elbow 90° P/14

BT8 -T Tee P/14

BT8 -C Cross P/14

BT8 -IR Inside Riser P/15

BT8 -OR Outside Riser P/15

BT8-MR Middle Reducer P/15

BT8-RR Right Hand Reducer P/16

BT8-LR Left Hand Reducer P/16

BW8-SC Straight Coupler P/16

FRP Fiberglass Reinforced Plastics / GRP

F Fire Rated

Z Zinc Plated

E Electrolytic Polishing

M Mill / Plain Steel

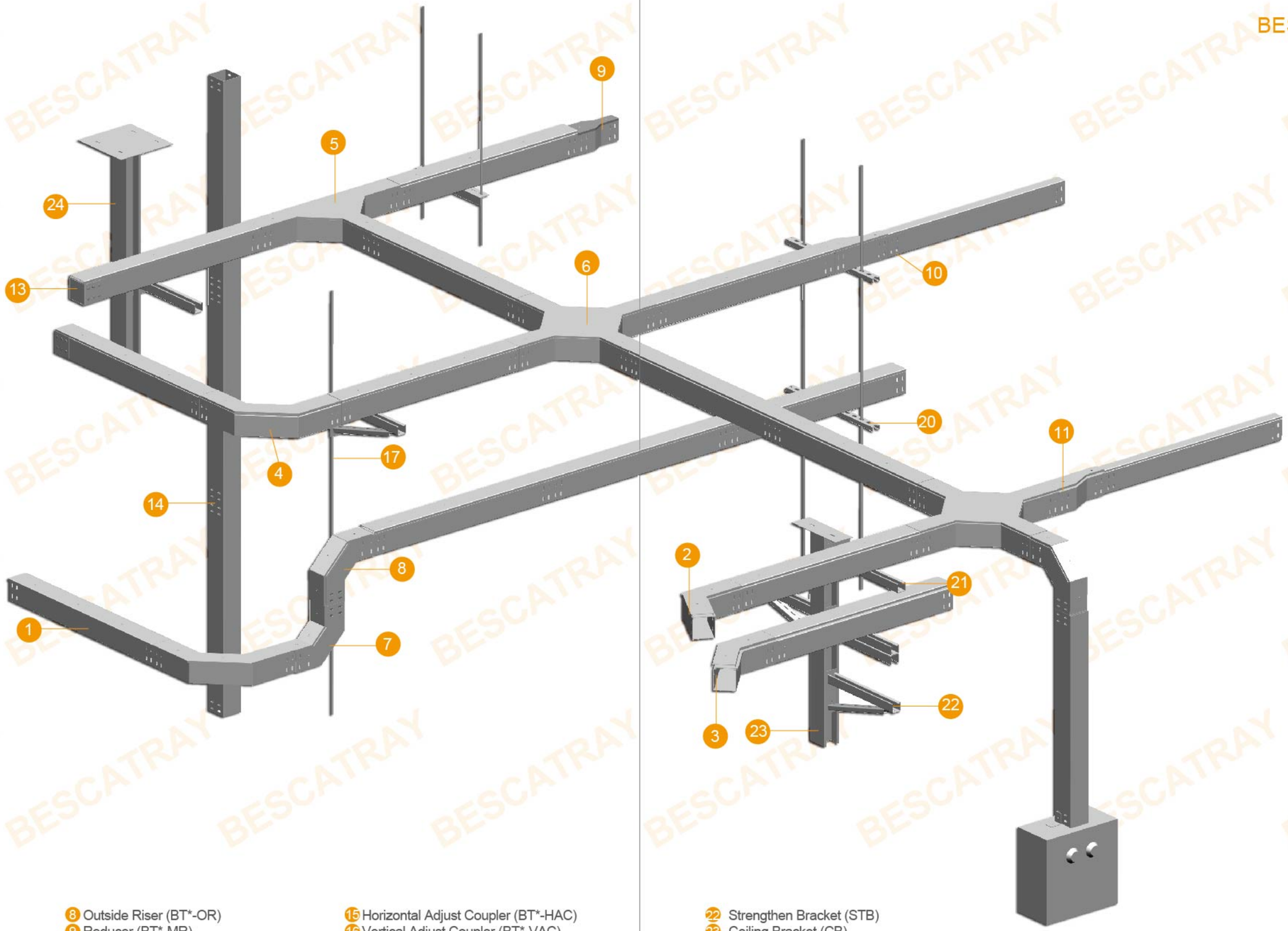

1 Cable Trunking Straight (BT*)
2 Elbow 45° (BT*-E1)
3 Elbow 60° (BT*-E2)
4 Elbow 90°(BT*-E3)
5 Tee (BT*-T)
6 Cross (BT*-C)
7 Inside Riser (BT*-IR)
8 Outside Riser (BT*-OR)
9 Reducer (BT*-MR)
10 Right Hand Reducer (BT*-RR)
11 Left Hand Reducer (BT*-LR)
12 Divider (BT*-D)
13 Blind End (BT*-BE)
14 Straight Coupler (BT*-SC)
15 Horizontal Adjust Coupler (BT*-HAC)
16 Vertical Adjust Coupler (BT*-VAC)
17 Threaded Rod (TR)
18 Bolt & Nut (BN)
19 Under Floor Stand (UFS)
20 Straight Bracket (SB)
21 Wall Bracket (WB)
22 Strengthen Bracket (STB)
23 Ceiling Bracket (CB)
24 Strengthening Ceiling Bracket (SCB)

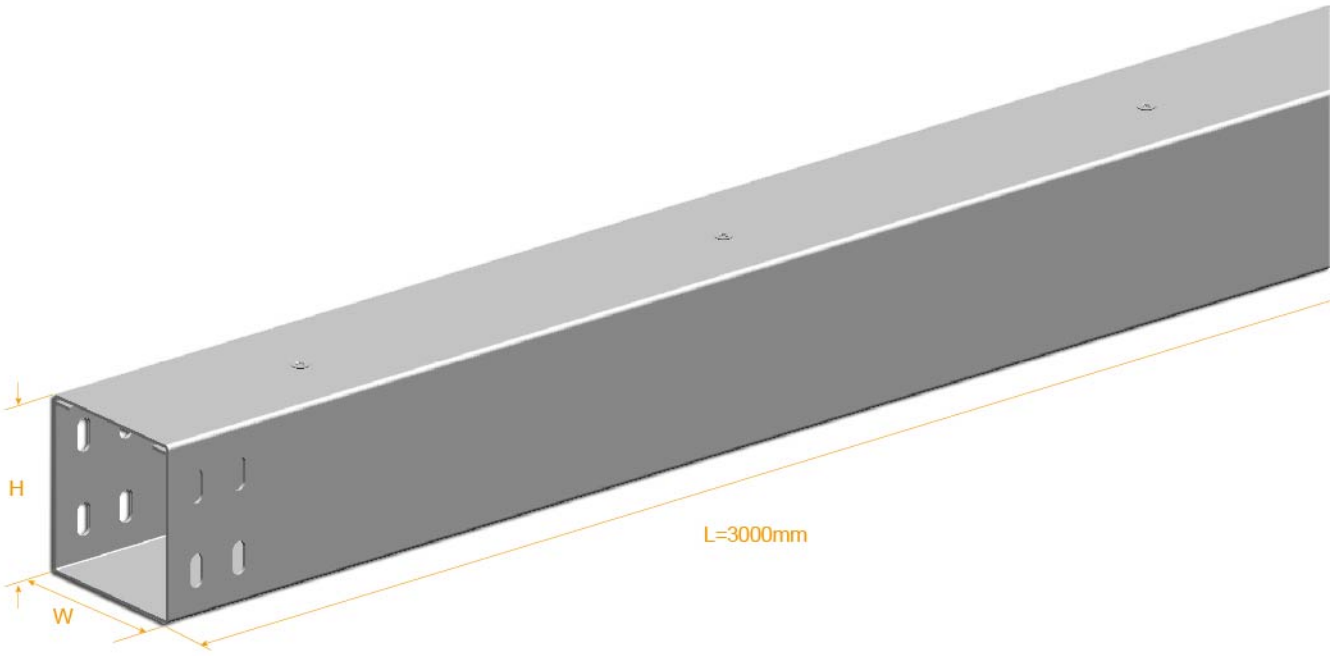

BT1/2/3/4/5/6 Cable Trunking

BT1/2/3/4/5/6 Cable Trunking

Ordering Code	W (mm)	H (mm)	L (mm)
BT1G	50	50	3000
BT2G	75	75	3000
BT3G	100	75	3000
BT4G	100	100	3000
BT5G	150	100	3000
BT6G	150	150	3000

www.bescatray.com

BT1/2/3/4/5/6 -E3 Elbow 90°

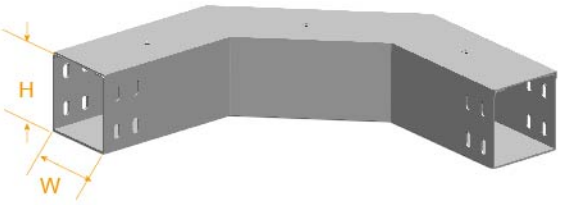

Ordering Code	W (mm)	H (mm)
BT1-E3G	50	50
BT2-E3G	75	75
BT3-E3G	100	75
BT4-E3G	100	100
BT5-E3G	150	100
BT6-E3G	150	150

BT1/2/3/4/5/6 -E3 Elbow 90°

BT1/2/3/4/5/6 -T Tee

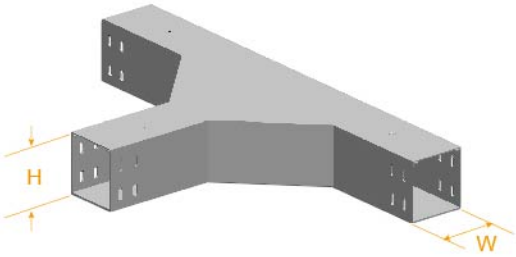

Ordering Code	W (mm)	H (mm)
BT1-TG	50	50
BT2-TG	75	75
BT3-TG	100	75
BT4-TG	100	100
BT5-TG	150	100
BT6-TG	150	150

BT1/2/3/4/5/6 -T Tee

BT1/2/3/4/5/6 -C Cross

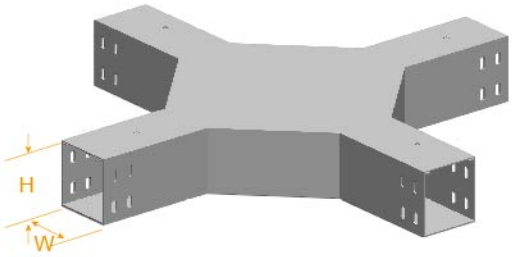

Ordering Code	W (mm)	H (mm)
BT1-CG	50	50
BT2-CG	75	75
BT3-CG	100	75
BT4-CG	100	100
BT5-CG	150	100
BT6-CG	150	150

BT1/2/3/4/5/6 -C Cross

BT1/2/3/4/5/6 -IR Inside Riser

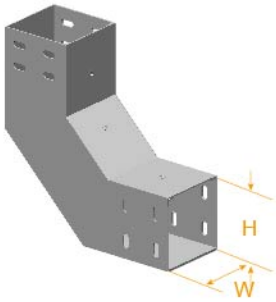

Ordering Code	W (mm)	H (mm)
BT1-IRG	50	50
BT2-IRG	75	75
BT3-IRG	100	75
BT4-IRG	100	100
BT5-IRG	150	100
BT6-IRG	150	150

BT1/2/3/4/5/6 -IR Inside Riser

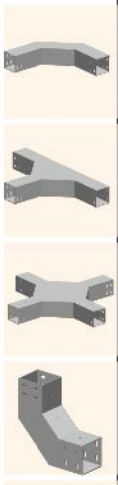

BT1/2/3/4/5/6 -OR Outside Riser

Ordering Code	W (mm)	H (mm)
BT1-ORG	50	50
BT2-ORG	75	75
BT3-ORG	100	75
BT4-ORG	100	100
BT5-ORG	150	100
BT6-ORG	150	150

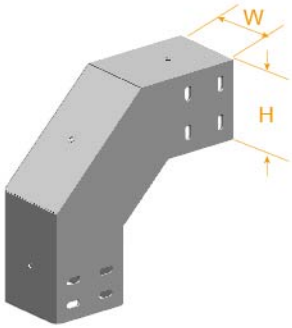

BT1/2/3/4/5/6 -OR Outside Riser

BT*-MR Middle Reducer

Ordering Code	W1 (mm)	W2 (mm)	H (mm)
BT2-MR100075G	100	75	75
BT4-MR150100G	150	100	100

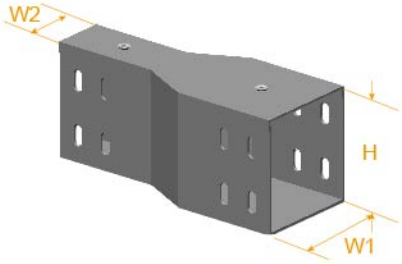

BT*-MR Middle Reducer

BT*-RR Right Hand Reducer

Ordering Code	W1 (mm)	W2 (mm)	H (mm)
BT2-RR100075G	100	75	75
BT4-RR150100G	150	100	100

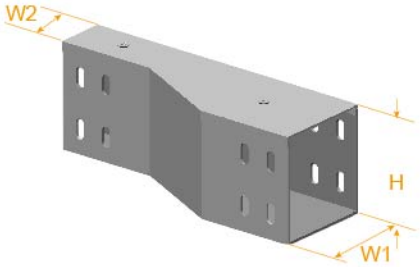

BT*-RR Right Hand Reducer

BT*-LR Left Hand Reducer

Ordering Code	W1 (mm)	W2 (mm)	H (mm)
BT2-LR100075G	100	75	75
BT4-LR150100G	150	100	100

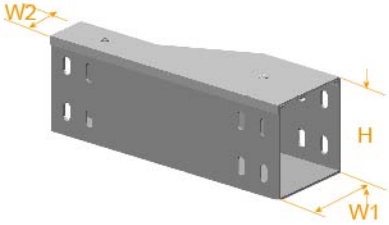

BT*-LR Left Hand Reducer

www.bescatray.com

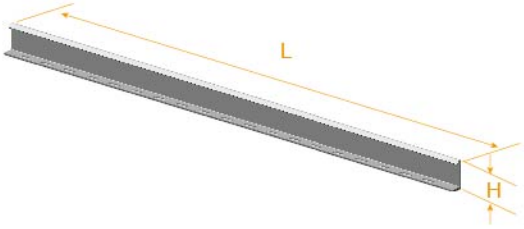

BT*-D Divider

Ordering Code	H (mm)	L (mm)
BT1-DG	50	3000
BT2-DG	75	3000
BT4-DG	100	3000
BT6-DG	150	3000

BT*-D Divider

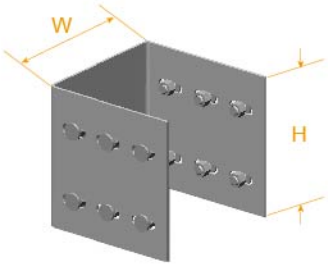

BT*-BE Blind End

Ordering Code	W (mm)	H (mm)
BT1-BEG	50	50
BT2-BEG	75	75
BT3-BEG	100	75
BT4-BEG	100	100
BT5-BEG	150	100
BT6-BEG	150	150

BT*-BE Blind End

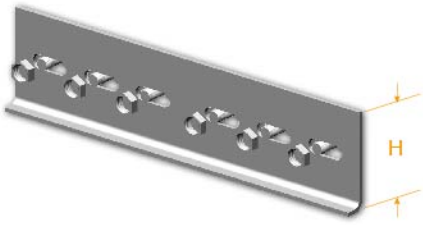

BW*-SC Straight Coupler

Ordering Code	H (mm)
BT1-SCG	50
BT2-SCG	75
BT4-SCG	100
BT6-SCG	150

BW*-SC Straight Coupler

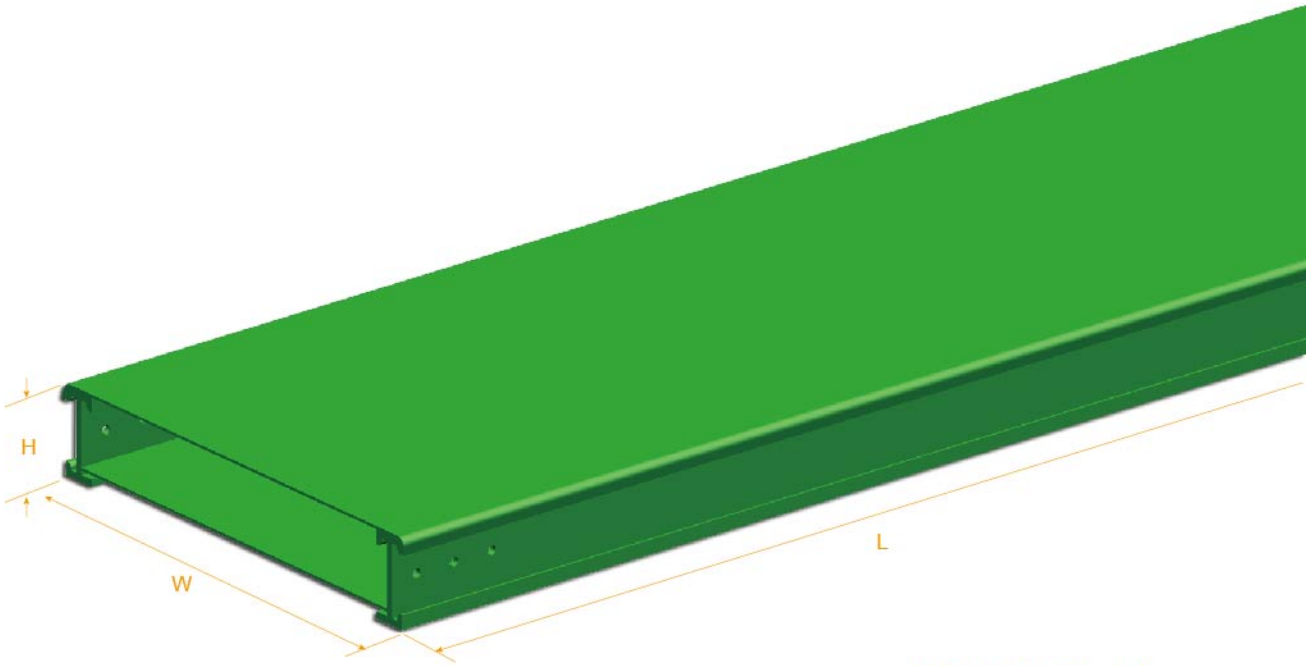

BT7 Cable Trunking

BT7 Cable Trunking

Ordering Code	W (mm)	H (mm)	L (mm)
BT7-150FRP	150	100	3000
BT7-200FRP	200	100	3000
BT7-300FRP	300	100	3000
BT7-400FRP	400	100	3000
BT7-500FRP	500	100	3000
BT7-600FRP	600	100	3000
BT7-800FRP	800	100	3000

BT7 Elbow 90°

Ordering Code	W (mm)	H (mm)
BT7-E150FRP	150	100
BT7-E200FRP	200	100
BT7-E300FRP	300	100
BT7-E400FRP	400	100
BT7-E500FRP	500	100
BT7-E600FRP	600	100
BT7-E800FRP	800	100

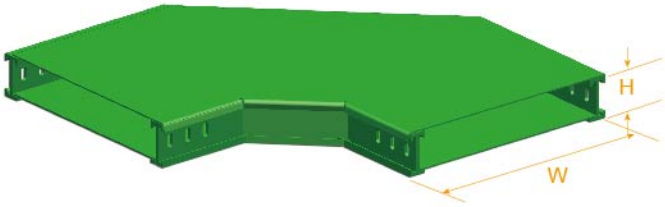

BT7 Elbow 90°

BT7 -T Tee

Ordering Code	W (mm)	H (mm)
BT7-T150FRP	150	100
BT7-T200FRP	200	100
BT7-T300FRP	300	100
BT7-T400FRP	400	100
BT7-T500FRP	500	100
BT7-T600FRP	600	100
BT7-T800FRP	800	100

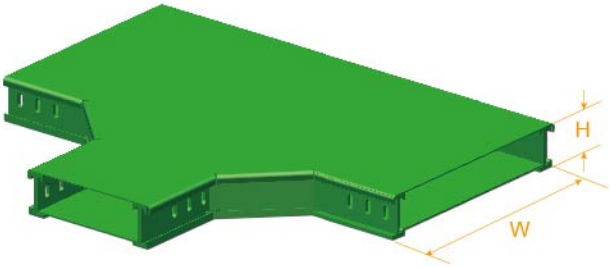

BT7 -T Tee

BT7 -C Cross

Ordering Code	W (mm)	H (mm)
BT7-C150FRP	150	100
BT7-C200FRP	200	100
BT7-C300FRP	300	100
BT7-C400FRP	400	100
BT7-C500FRP	500	100
BT7-C600FRP	600	100
BT7-C800FRP	800	100

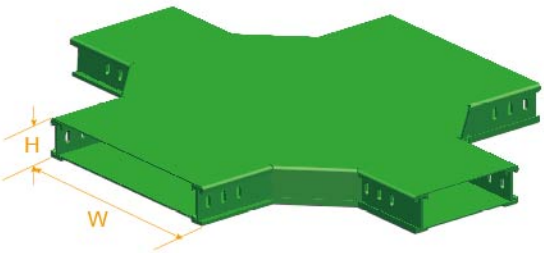

BT7 -C Cross

www.bescatray.com

BT7 -IR Inside Riser

Ordering Code	W (mm)	H (mm)
BT7-IR150FRP	150	100
BT7-IR200FRP	200	100
BT7-IR300FRP	300	100
BT7-IR400FRP	400	100
BT7-IR500FRP	500	100
BT7-IR600FRP	600	100
BT7-IR800FRP	800	100

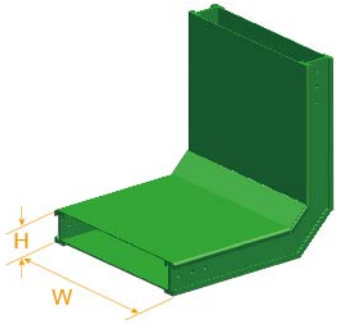

BT7 -IR Inside Riser

BT7 -OR Outside Riser

Ordering Code	W (mm)	H (mm)
BT7-OR150FRP	150	100
BT7-OR200FRP	200	100
BT7-OR300FRP	300	100
BT7-OR400FRP	400	100
BT7-OR500FRP	500	100
BT7-OR600FRP	600	100
BT7-OR800FRP	800	100

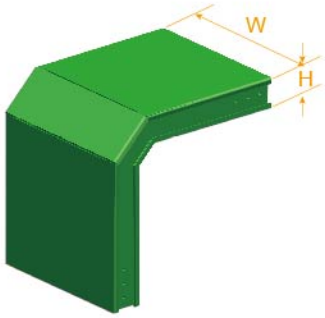

BT7 -OR Outside Riser

BT7-MR Middle Reducer

Ordering Code	W1 (mm)	W2 (mm)	H (mm)
BT7-MR600500FRP	600	500	100
BT7-MR600400FRP	600	400	100
BT7-MR500400FRP	500	400	100
BT7-MR500300FRP	500	300	100
BT7-MR500200FRP	500	200	100
BT7-MR400300FRP	400	300	100
BT7-MR400200FRP	400	200	100
BT7-MR400150FRP	400	150	100

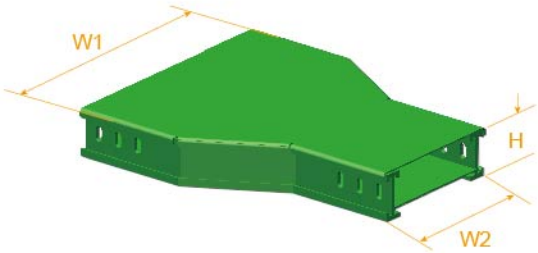

BT7-MR Middle Reducer

www.bescatray.com

BT7-RR Right Hand Reducer

Ordering Code	W1 (mm)	W2 (mm)	H (mm)
BT7-RR600500FRP	600	500	100
BT7-RR600400FRP	600	400	100
BT7-RR500400FRP	500	400	100
BT7-RR500300FRP	500	300	100
BT7-RR500200FRP	500	200	100
BT7-RR400300FRP	400	300	100
BT7-RR400200FRP	400	200	100
BT7-RR400150FRP	400	150	100

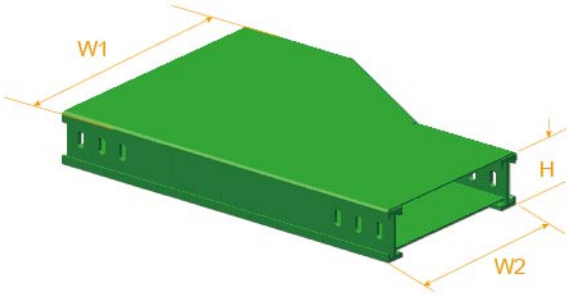

BT7-RR Right Hand Reducer

BT7-LR Left Hand Reducer

Ordering Code	W1 (mm)	W2 (mm)	H (mm)
BT7-LR600500FRP	600	500	100
BT7-LR600400FRP	600	400	100
BT7-LR500400FRP	500	400	100
BT7-LR500300FRP	500	300	100
BT7-LR500200FRP	500	200	100
BT7-LR400300FRP	400	300	100
BT7-LR400200FRP	400	200	100
BT7-LR400150FRP	400	150	100

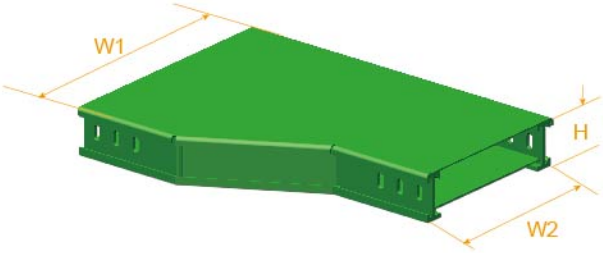

BT7-LR Left Hand Reducer

BT7-SC Straight Coupler

Ordering Code	H (mm)
BT7-SC	100

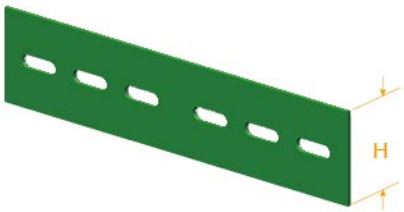

BT7-SC Straight Coupler

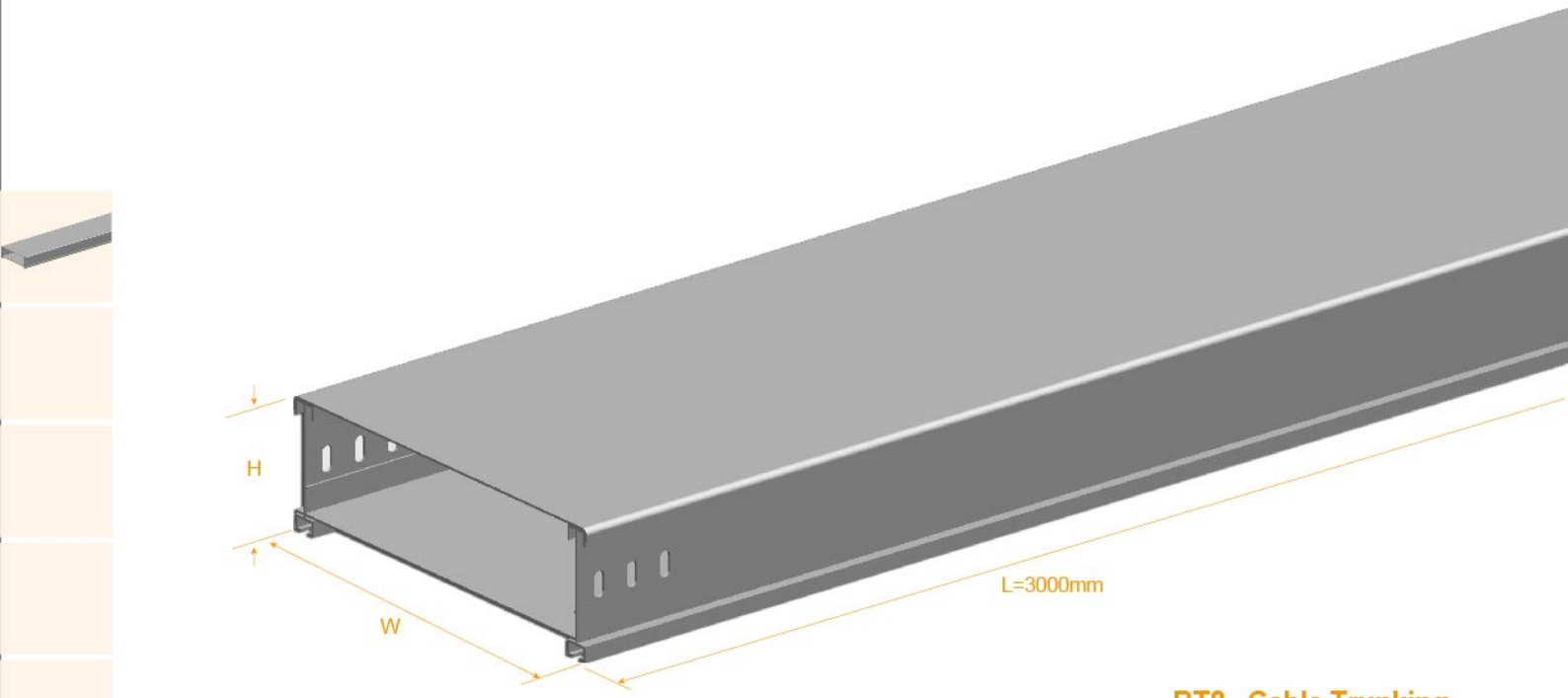

BT8 Cable Trunking

BT8 Cable Trunking

Ordering Code	W (mm)	H (mm)	L (mm)
BT8-150A	150	100	3000
BT8-200A	200	100	3000
BT8-300A	300	100	3000
BT8-400A	400	100	3000
BT8-500A	500	100	3000
BT8-600A	600	100	3000
BT8-800A	800	100	3000

www.bescatray.com

BT8 Elbow 90°

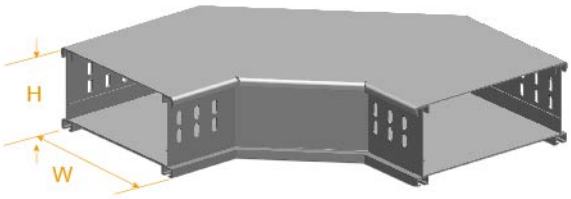

Ordering Code	W (mm)	H (mm)
BT8-E150A	150	100
BT8-E200A	200	100
BT8-E300A	300	100
BT8-E400A	400	100
BT8-E500A	500	100
BT8-E600A	600	100
BT8-E800A	800	100

BT8 Elbow 90°

BT8 -T Tee

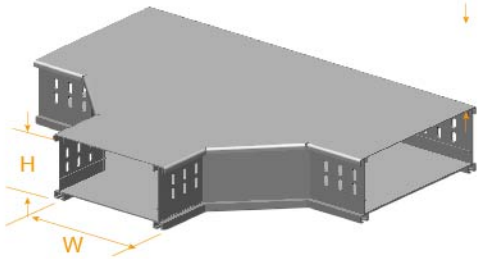

Ordering Code	W (mm)	H (mm)
BT8-T150A	150	100
BT8-T200A	200	100
BT8-T300A	300	100
BT8-T400A	400	100
BT8-T500A	500	100
BT8-T600A	600	100
BT8-T800A	800	100

BT8 -T Tee

BT8 -C Cross

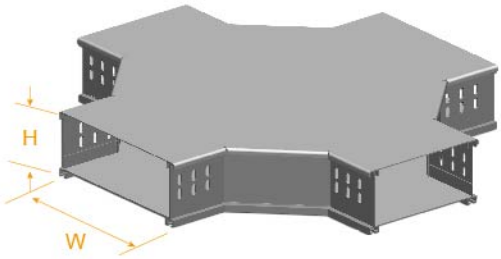

Ordering Code	W (mm)	H (mm)
BT8-C150A	150	100
BT8-C200A	200	100
BT8-C300A	300	100
BT8-C400A	400	100
BT8-C500A	500	100
BT8-C600A	600	100
BT8-C800A	800	100

BT8 -C Cross

BT8 -IR Inside Riser

Ordering Code	W (mm)	H (mm)
BT8-IR150A	150	100
BT8-IR200A	200	100
BT8-IR300A	300	100
BT8-IR400A	400	100
BT8-IR500A	500	100
BT8-IR600A	600	100
BT8-IR800A	800	100

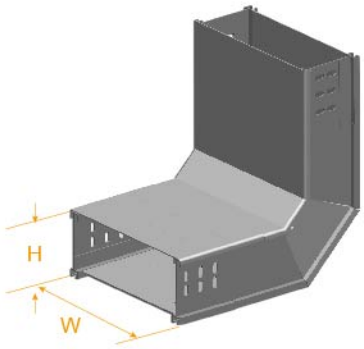

BT8 -IR Inside Riser

BT8 -OR Outside Riser

Ordering Code	W (mm)	H (mm)
BT8-OR150A	150	100
BT8-OR200A	200	100
BT8-OR300A	300	100
BT8-OR400A	400	100
BT8-OR500A	500	100
BT8-OR600A	600	100
BT8-OR800A	800	100

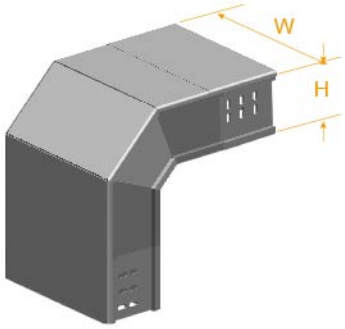

BT8 -OR Outside Riser

BT8-MR Middle Reducer

Ordering Code	W1 (mm)	W2 (mm)	H (mm)
BT8-MR600500A	600	500	100
BT8-MR600400A	600	400	100
BT8-MR500400A	500	400	100
BT8-MR500300A	500	300	100
BT8-MR500200A	500	200	100
BT8-MR400300A	400	300	100
BT8-MR400200A	400	200	100
BT8-MR400150A	400	150	100

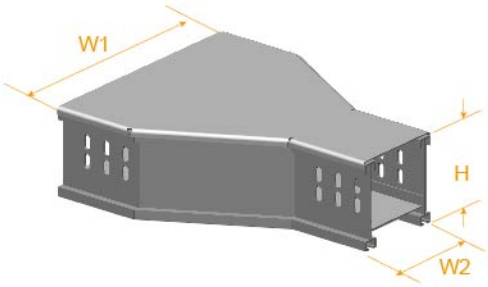

BT8-MR Middle Reducer

www.bescatray.com

G Pre-Galvanized / PG / GI H Hot Dip Galvanized / HDG S4 Stainless Steel SS304 S6 Stainless Steel SS316 P Powder Coated

BT8-RR Right Hand Reducer

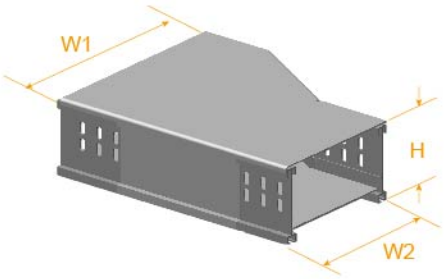

Ordering Code	W1 (mm)	W2 (mm)	H (mm)
BT8-RR600500A	600	500	100
BT8-RR600400A	600	400	100
BT8-RR500400A	500	400	100
BT8-RR500300A	500	300	100
BT8-RR500200A	500	200	100
BT8-RR400300A	400	300	100
BT8-RR400200A	400	200	100
BT8-RR400150A	400	150	100

BT8-RR Right Hand Reducer

BT8-LR Left Hand Reducer

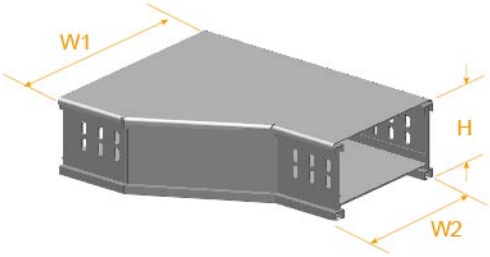

Ordering Code	W1 (mm)	W2 (mm)	H (mm)
BT8-LR600500A	600	500	100
BT8-LR600400A	600	400	100
BT8-LR500400A	500	400	100
BT8-LR500300A	500	300	100
BT8-LR500200A	500	200	100
BT8-LR400300A	400	300	100
BT8-LR400200A	400	200	100
BT8-LR400150A	400	150	100

BT8-LR Left Hand Reducer

BT8-SC Straight Coupler

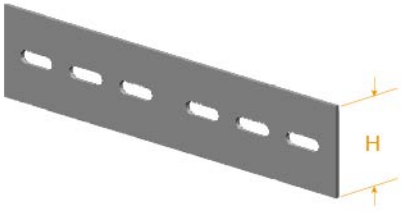

Ordering Code	H (mm)
BT8-SC	100

BT8-SC Straight Coupler

www.bescatray.com